Turning Water Around…®

Thank you for your interest in our **Downstream Defender®** and **Up-Flo™ Filter** stormwater treatment systems. I am delighted to provide you with further information about each.

In this information pack I have included a Design Data Sheet for each system, along with case studies to illustrate some examples of how these systems have helped engineers to capture runoff pollution and protect the natural environment.

This information pack provides an introduction to each system—if you would like further detail about either of these technologies, however, or if you would like to discuss a particular project or design requirement in more depth, I would be very happy to help. Just call me on **+971 557 644 961** or e-mail at **enatsheh@hydro-int.com**.

You can also find more technical information and case studies online at **hydro-int.com**.

I hope you find this information helpful.

Kind regards

Ezzat Natsheh
Regional Business Manager, MENA
Tel: +971 557 644 961
E-mail: enatsheh@hydro-int.com

Downstream Defender®

Design data sheet

Hydro International®

An advanced hydrodynamic vortex separator for the effective and reliable removal of fine particles, oils and other floatable debris from surface water runoff.

Its innovative design delivers high efficiency across a wide range of flows in a much smaller footprint than conventional or other swirl-type devices and it is the perfect choice for any catchment likely to convey high quantities of contamination.

1. Access for removal of floatables and sediments.
2. Inlet pipe.
3. Inlet chute.
4. Centre shaft.
5. Dip plate.
6. Centre cone.
7. Benching skirt.
8. Floatables and oil storage.
9. Isolated sediment storage zone.
10. Outlet pipe.

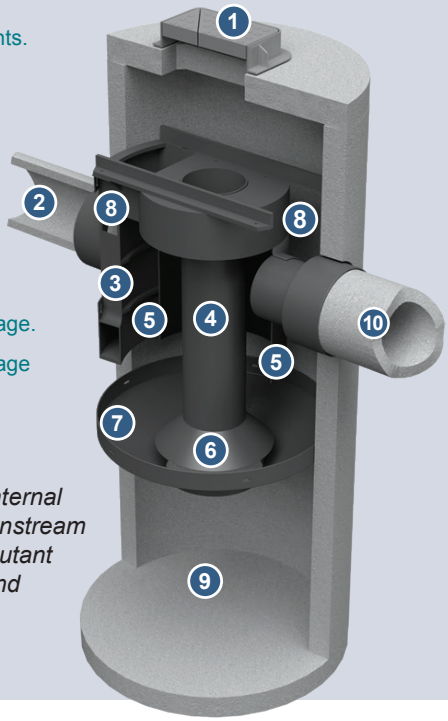

Figure 1 - The unique internal components of the Downstream Defender® enhance pollutant removal performance and prevent wash out.

Unique Flow Modifying Components

The Downstream Defender® consists of a structural concrete chamber with unique flow modifying internal components.

It is these internal components that differentiate the Downstream Defender® from catchpits, sedimentation basins or sedimentation sumps.

They facilitate advanced hydrodynamic vortex separation by reducing turbulence, lengthening the flow path to increase chamber residence time and introducing shear planes.

The internal components also ensure that the pollutant storage zones are isolated and protected from high flows that could cause pollutant re-entrainment or wash out.

Compared to devices that have poorly designed internal components, the Downstream Defender® captures and retains more of the annual pollutant load.

Repeatable, Reliable Performance

The Downstream Defender® delivers high removal of pollutants through advanced, hydrodynamic separation across a wide range of flows. The device has a proven track record of tackling an assortment of pollutants including:

Fine particles

Greater than 80% removal of fine sand particles.

Gross Pollutants

100% of floatable debris, such as food wrappers, Styrofoam cups and drinks cartons removed in independent site trials.

Liquid and Sediment Bound Hydrocarbons

Greater than 50% removal of various forms of hydrocarbons, including free floating oils and polycyclic aromatic hydrocarbons (PAHs).

Sediment Bound Heavy Metals and Nutrients

Heavy Metals

Nutrients

As an efficient device for removal of fine sediment, the Downstream Defender® is also effective for removal of sediment bound pollutants.

Downstream Defender®
Design data sheet

No Risk of Pollutant Wash Out

The Downstream Defender® has been specially designed to isolate the pollutant storage zones and is proven to prevent pollutant wash out.

Sizing

The Downstream Defender® can be sized for different treatment goals and objectives.

For design purposes, the selected model's Treatment Flow Rate should be greater than or equal to the site's Water Quality Flow Rate.

The hydraulic capacity of the selected model should be considered with respect to the peak discharge flow rate from the site.

Model Diameter (m)	Treatment Flow Rate (l/s) a)	Hydraulic Capacity (l/s) b)	Oil Storage Capacity (l)	Sediment Storage Capacity (m^3)
1.2	42	120	270	0.7
1.8	96	270	1350	1.7
2.55	192	542	2500	3.8
3.0	265	750	4650	4.4

Notes:

a) Treatment flow rates based on >80% removal of US Silica Sand OK110 with no flow bypass. Sizing based on removal of finer or coarser sediment ranges or for free oil removal can be provided if required.

b) Maximum flow rate that can pass through the chamber without surcharge to the upstream network.

Head loss at the treatment flow rate is typically less than 500 mm.

Table 1 - Downstream Defender® design information.

Expert Design Service

Our professional engineers are on hand to provide free support with the correct sizing and selection of the Downstream Defender® within each drainage design.

We can also provide estimated maintenance intervals, whole life cost estimates and predicted pollutant removal performance.

Call us on **+61 436 433 686** or e-mail **enquiries@hydro-int.com** to arrange design support.

Setting Out

The Downstream Defender® can accommodate a change in pipe direction to suit site specific requirements. Combined with the high rate internal bypass, this helps to avoid the need for additional manholes on site. Head loss across the chamber is kept to a minimum (see Table 1).

The inlet and outlet pipes should be sized in accordance with Table 2 (opposite), and a minimum of 90 degrees between inlet and outlet is required.

Inlet and outlet pipe connections are at the same invert level.

Additional manhole sections can be provided to extend the chamber to meet site cover and invert levels or provide additional pollutant storage where required.

Downstream Defender®

Design data sheet

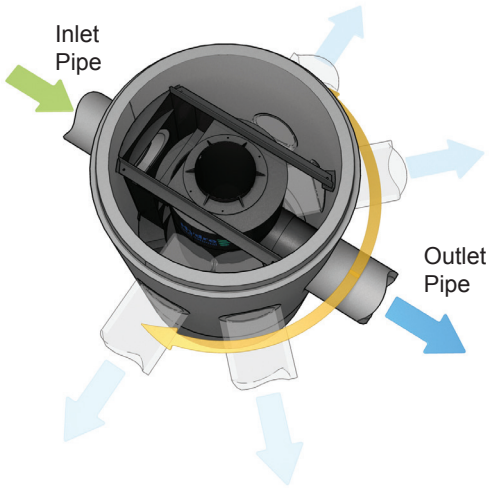

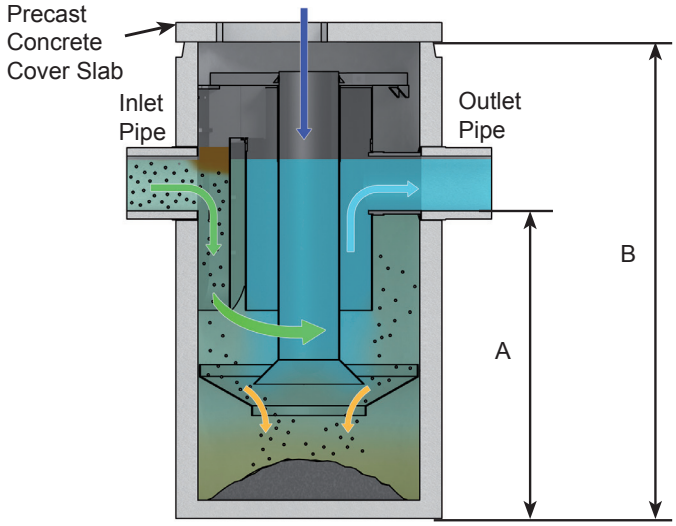

Dimensions and Weights

General arrangement drawings of all units are available for download from:
http://www.hydro-int.com/en-gb/products/downstream-defender-0

Unit	External Diameter of Unit (mm)	Inlet & Outlet Pipe Diameter (mm)	Depth (m)			Lift Weight (t)
			A	B	Component Depth a)	
1.2 m Sealed Manhole System with HD Cover Slab	1460	300	1.910	2.600	2.830	
HD Cover Slab b)					0.230	0.6
Base Section					0.825	1.5
Top Section					1.765	2.5
1.8 m Sealed Manhole System with HD Cover Slab	2160	450	2.510	3.800	4.050	
HD Cover Slab b)					0.290	1.4
Base Section					1.235	5.0
Top Section					2.485	8.0
2.55 m System with HD Cover Slab	2850	600	2.950	4.750	4.950	
HD Cover Slab b)					0.200	2.8
Base Section					1.750	8.0
Top Section					3.000	10.0
3.0 m System with HD Cover Slab	3350	750	3.125	5.000	5.200	
HD Cover Slab b)					0.200	4.6
Base Section					2.000	12.5
Top Section					3.000	14.0

Notes:
a) Base and Top Section component depths are shown as the total height during transportation / before assembly on site. The total depth is the depth of the assembled unit.
b) Cover slabs are heavy duty, suited for highways loading and are supplied with one or two access openings for maintenance.
c) Inlets and outlets are supplied with cast-in holes only. No stub pipes are provided.

Dimensional Tolerances: Height ± 25 mm; Diameter ± 12 mm; Wall Thickness ± 10 mm

Table 2 - Downstream Defender® dimensions and weights.

Downstream Defender®

Design data sheet

Easy to Install

The Downstream Defender® is typically delivered to site as a precast concrete manhole with internal components already installed. Installation is therefore similar to any other manhole installation on site. Full installation guidelines are available.

Lightweight High Density Polyethylene (HDPE) chambers can be provided where installation of a concrete manhole is not practical.

Easy to Maintain

Maintenance of the Downstream Defender® is simple, safe and cost-effective. Maintenance is carried out from the surface, using a standard vacuum tanker and personnel are not required to enter the device.

With a large capacity to store sediments and oils (see Table 1), and with a proven ability to prevent wash out, maintenance intervals can be years rather than months - depending on site conditions.

Additional pollutant storage can be built into the chamber to extend maintenance intervals if required.

Available Downstream Defender® Technical Guidance

Case Studies

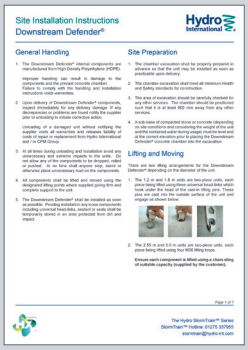

Installation and Maintenance Guidelines

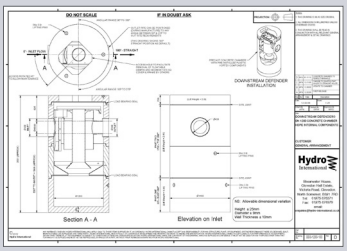

General Arrangement Drawings

Learn more

To learn more about how Downstream Defender® can help you to manage water more effectively, visit **hydro-int.com**, search **Downstream Defender** online or contact us:

Americas
+1 (207) 756 6200
inquiries@hydro-int.com

Asia Pacific
+61 436 433 686
enquiries@hydro-int.com

Europe & RoW
+44 (0)1275 878371
enquiries@hydro-int.com

Middle East
+971 506 026 400
enquiries@hydro-int.com

hydro-int.com/contact

Case Study

Hydro International®

Downstream Defender® saves threatened London wetland from stormwater pollution

Project profile

Objective

Runoff from nearby highways was threatening the precarious wetland habitat of London's Shortwood Pond, home to endangered species such as the Brown Galingale plant and the Little Whirlpool Ramshorn snail.

Solution

Engineers used a Downstream Defender® advanced vortex separator to capture sediment, oil and floatables from stormwater runoff, pretecting the pond from damaging runoff pollution.

Product profile

The Downstream Defender® removes fine particles, oils and other floatable debris from surface water runoff.

- No risk of pollutant wash out
- Easy to install and maintain
- Repeatable, reliable performance
- High efficiency over a wide range of flows
- Flexible and adaptable

Shortwood Pond is a wetland habitat situated by the A308 just south of Heathrow Airport in London, UK. It is home to endangered species such as the Brown Galingale plant and the Little Whirlpool Ramshorn snail. It is part of Staines Moor, located at the eastern end of Colne Valley Park, an area that contains many Sites of Special Scientific Interest (SSSIs).

Staines Moor is one of the remaining pastures of the manor of Staines, having been unploughed for at least a thousand years and common land since 1065.

Given its precarious location between Staines and other conurbations, preservation of the quality of the habitats in this river valley is of high importance to the Spelthorne Borough Council, Plantlife UK, Colne Valley Park, Groundwork Thames Valley and the Environment Agency.

An increase in fine black globular sediment in the pond was causing concern; a pond without outlets acts like a sump, and can accumulate sediment which blankets the plants and algae, leading to very poor, oxygen-depleted water conditions.

Infrastructure and business services firm Mouchel, on behalf of the Highways Agency, contacted Hydro International looking for a way to protect the pond from the damaging pollutants that were being washed into it in stormwater runoff.

"Road drainage work in the 1970s directed stormwater runoff into Shortwood Pond and, in recent years, water quality has been declining. Increasing traffic contributes to this pollution, and there was also no protection from a major spillage event.

The Downstream Defender® is ideally suited to protecting the pond, because it separates out and retains the sediments - entrapped materials are not washed out by high storm flows as they would be in conventional gully pots. The hydrocarbons and floatable portions are also retained.

The project was completed within a tight budget and kept to a small footprint. Apart from chamber emptying, maintenance is minimal. In fact, we were able to oversize it to allow for up to 50 l/s and help protect the site against future large storm events."

- David Funchal, Project Engineer, Mouchel

Up-Flo™ Filter
Design data sheet

Hydro International®

The Up-Flo™ Filter delivers a high-performance multi-stage treatment train within a single device, combining sedimentation and screening with fluidised bed filtration technology to deliver exceptional removal of solids, nutrients, metals, oils and hydrocarbons.

1. Inlet pipe.
2. Media pack.
3. Sump.
4. Bypass siphon with floatables baffle.
5. Outlet module with integral drain down port.
6. Filter module.
7. Outlet pipe.
8. Angled screen.

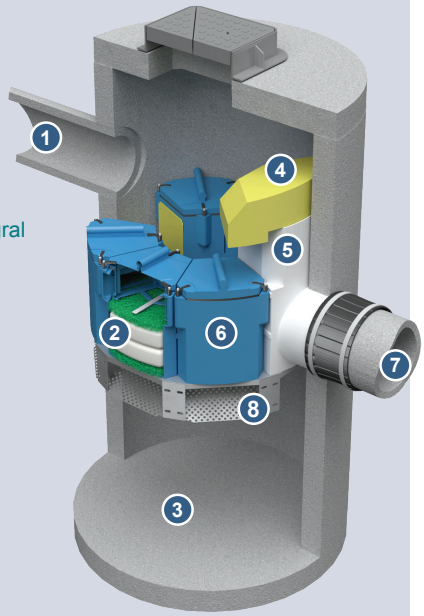

Figure 1 - The Up-Flo™ Fluidised Bed Up Flow Filtration System

Components and Filter Media

The Up-Flo™ Filter packs a four-to-five stage treatment train into a single device that can be fitted into a standard manhole. Settleable solids are collected in the chamber sump, while floatable material gathers in the central chamber.

An angled 4 mm perforated screen prevents coarse material from reaching the filter media.

The media itself can be tailored to target specific pollutant groups and, where required, promote reactive filtration.

The fluidised bed technology prevents blinding, clogging and compaction of the media surface, whilst ensuring that no wormholes can form to short-circuit the treatment process.

Filter media options include:

Filter Sand: A good all-round media to target sediment and sediment-bound pollutants.

CPZ™ Mix: An engineered media to promote reactive filtration for enhanced treatment of metals, nutrients and organics.

Repeatable, Reliable Performance

The Up-Flo™ Filter combines multiple sequential treatment processes to deliver sedimentation, screening and filtration all in one compact unit to remove a wide variety of pollutants including:

Very Fine Particles

Greater than 80% removal of fine sand and silt particles to a mass-median particle size of 22 µm.

See Technical Abstract: Performance Verification of Sediment Removal with Sil-Co-Sil 106 for your media of choice.

Gross Pollutants

Inclusion of the angled screen and protected bypass syphon effectively removes gross pollutants, including litter and leaf debris.

Liquid and Sediment Bound Hydrocarbons

Removal of various forms of hydrocarbons, including polycyclic aromatic hydrocarbons (PAHs).

Heavy Metals

Greater than 70% removal of metals commonly found in surface water runoff.

See Technical Abstract: Field Evaluation of Metals Removal.

Nutrients

Greater then 70% removal of phosphorus and other nutrients.

See Technical Abstract: Field Evaluation of Phosphorus Removal.

Downstream Defender®

Design data sheet

Sizing

The modular design of the Up-Flo™ Filter ensures that project specific treatment goals are easily met. Intended for intercepting pollutants at or close to source, the modular components are standardised for installation into a standard 1.2 m diameter manhole. For larger catchment areas, custom built vaults can be created to accommodate additional filter modules.

For design purposes, the selected number of modules required should be such that the total Treatment Flow Rate is greater or equal to the site's Water Quality Flow Rate.

The hydraulic capacity of the system should be considered with respect to the peak discharge flow rate from the site or pipe full flow rate.

Model	Chamber Size (m)	Number of Filter Modules	Treatment Flow Rate (l/s) a)	Hydraulic Capacity (l/s) b)	Operating Head (mm) c)	Oil Storage Capacity (l)	Sediment Storage Capacity (m^3)
Manhole	1.2 m diameter	1-6	1.3 - 7.8	170	750	190	0.7
Vault	Site specific	7-19	7.8 - 24.7	170	750	Site specific	Site specific

Notes:
a) Treatment flow rates based on >80% removal of Sil-Co-Sil 106 fine sand and silt (D_{50} = 22 µm).
b) Maximum flow rate that can pass through the chamber without surcharge to the upstream network.
c) Driving head for filter media.

Table 1 - Up-Flo™ Filter design information.

Expert Design Service

Our professional engineers are on hand to provide free support with the correct sizing and selection of the Up-Flo™ Filter within each drainage design.

We can also provide estimated maintenance intervals, whole life cost estimates and predicted pollutant removal performance.

Call us on **+61 436 433 686** or e-mail **enquiries@hydro-int.com** to arrange design support.

Downstream Defender®

Design data sheet

Easy Installation for Trouble-free Construction

The Up-Flo™ Filter is typically delivered to site as a pre-cast concrete manhole, complete with innovative manhole sealing system and internal components already installed. Installation is therefore similar to any other manhole installation on site.

The relative position of the filter modules and the inlet / outlet pipes can be adjusted to suit site conditions.

The outlet adapter allows a variety of different outlet pipe sizes to be easily connected (see Table 2).

Full installation guidelines are available.

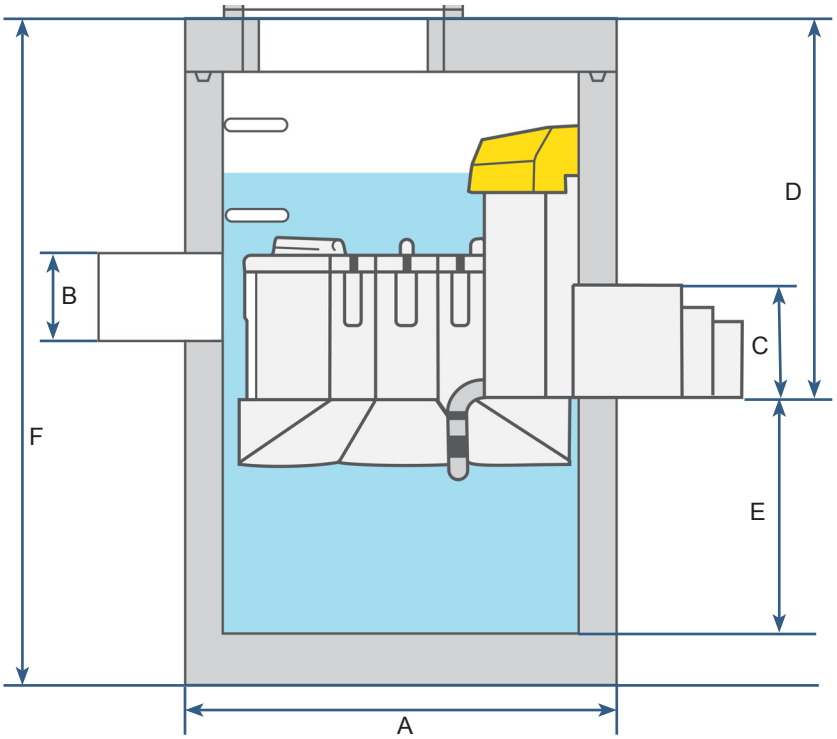

Dimensions and Weights

The dimensions in Table 2 are given as a guide for standard manhole configurations. Vault configurations are site specific.

Detailed general arrangement drawings are available for download from http://www.hydro-int.com/en-gb/products/flo-filter-0

Unit	External Diameter of Unit (mm) (A)	Inlet Pipe Diameter (mm) [c] (B)	Outlet Pipe Diameter (mm) [c] (C)	Depth (m)			Lift Weight (t)
				Depth to Outlet Invert (m BGL) (D)	Sump Depth (m) (E)	Component Depth [a] (m) (F)	
1.2 m Sealed Manhole System with HD Cover Slab	1460	300	225-375	1.150	1.100	2.560	n/a
HD Cover Slab [b]						0.230	0.60
Base Section						1.145	1.85
Top Section						1.330	1.60

Notes:

a) Base and Top Section component depths are shown as the total height during transportation / before assembly on site. The total depth is the depth of the assembled unit.

b) Cover slabs are heavy duty, suited for highways loading and are supplied with one or two access openings for maintenance.

c) Stub pipes are provided.

Table 2 - Up-Flo™ Filter dimensions and weights.

Downstream Defender®

Design data sheet

Simple and Cost-effective Maintenance

The gentle and effective action of the Up-Flo™ Filter ensures the filtration media have a much longer life than comparable media filters, so maintenance is infrequent, cost-effective and simple, with just three easy steps:

1) Floatable debris and litter is skimmed from the water surface.
2) Sediment collected in the sump is removed with a standard vacuum tanker.
3) Filter media packs are exchanged with no specialist lifting or handling equipment required.

Available Up-Flo™ Filter Technical Guidance

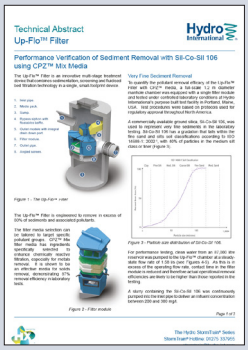

Technical Abstracts

Case Studies

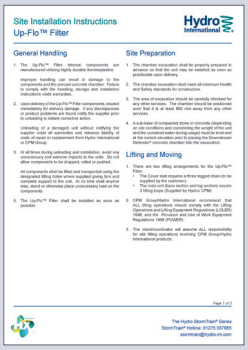

Installation and Maintenance Guidelines

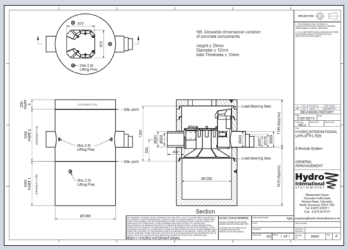

General Arrangement Drawings

Learn more

To learn more about how Up-Flo™ Filter can help you to manage water more effectively, visit **hydro-int.com**, search **Up-Flo Filter** online or contact us:

Americas
+1 (207) 756 6200
inquiries@hydro-int.com

Asia Pacific
+61 436 433 686
enquiries@hydro-int.com

Europe & RoW
+44 (0)1275 878371
enquiries@hydro-int.com

Middle East
+971 506 026 400
enquiries@hydro-int.com

hydro-int.com/contact

Case Study

Hydro International®

Auckland marina development protects pristine national conservation site

Project profile

Objective

Stringent stormwater treatment requirements threatened to quash a marina development project in Auckland, New Zealand. A shallow drainage profile exposed to tidal conditions further complicated the design challenges.

Solution

Three Up-Flo® Filters were used to remove >75% of Total Suspended Solids (TSS) and other pollutants from stormwater runoff prior to discharge into the bay.

Product profile

- The Up-Flo® Filter met and exceeded treatment requirements, with removal efficiencies at >90% for particles with a d_{50} of 20 micron
- The low headloss Up-Flo® Filter required substantially less hydraulic drop than a conventional sand filter
- High rate up-flow filtration translates to a smaller footprint, lower capital cost and lower maintenance cost than traditional downward flow sand filters

The Hauraki Gulf is an object of national pride in New Zealand. Held up as a national treasure, it is one of the country's most precious conservation icons due to its diversity natural life. Concern about the Gulf has been mounting since the 1990s due to increasing pressures from population growth, an expanding port and international events such as the America's Cup, which brought thousands of people to New Zealand.

Many companies had sought and failed to receive approval for development projects at Okahu Landing overlooking the Hauraki Gulf. Orakei Marina Development proposed the upgrade of 172 new berths and more than 8,000 m^2 of development consisting of a car park and gardens. To receive approval of the project, the firm needed to comply with strict environment requirements and overcome the challenges of working in tidal conditions.

The conversion of open space to impervious surfaces such as the car park proposed by Orakei Marina Development, would increase the volume of runoff and the risk of downstream flooding. Additionally, runoff from car park areas may contain high levels of pollutants, including trash and other debris, coarse and fine sediment, hydrocarbons, toxic trace metals, nutrients, pathogens and other contaminants.

Runoff from critical areas such as large car parks has been shown to have above average pollutant load, so multiple treatment processes are typically needed to address the composition and loading of the runoff.

Stormwater filtration is effective for controlling fine particulates and associated pollutants. However, a common challenge with traditional systems is a slow filtration rate (hence large footprint) and tendency to clog. With conventional down-flow filters, water flows down through a porous media filter that traps particles. If the particles are too large, they will block the filter and reduce the surface area available. Often, developers try to overcome this by increasing the footprint of the filter, but this takes up expensive real estate and involves considerably higher maintenance costs.

Conventional surface filtration devices are generally not cost-effective for managing stormwater runoff due to the relatively high flow rates that occur during storm events. The average 4,000 m^2 parking lot, for example, can generate approximately 28 l/s of water with average rainfall, yet typical down-flow filters can only handle between 0.1 and 0.3 l/s. This is a particular concern in a region such as Auckland, which experiences an average of 122 cm of rain per year.

To tackle these challenges, Orakei Marina Development hired Hynds Environmental Systems Ltd., a New Zealand firm that helps companies meet environmental requirements through stormwater treatment, sewage treatment, flood protection, combined sewer overflow systems and other solutions. Hynds Environmental supplied three Hydro International Up-Flo® Filter units to treat stormwater runoff from the marina's 12,000 m^3 of parking lots totalling 11.7 million litres.

The low headloss of the Up-Flo® Filter suited this shallow drainage system. Unlike traditional sand filters that can require up to 1.2 m or more of headloss to operate efficiently, the Up-Flo® Filter's combination of porous media, high flow-through rate and high treatment capacity allows for much lower headloss. At peak operational capacity, it only has approximately 75 cm of required headloss.

The three Up-Flo® Filters employ multiple methods to treat runoff from critical source areas such as car parks. The sump captures coarse grit and gross debris, the chamber eliminates floatables and trash, the angled screen handles neutrally buoyant material, and the filter media screens out fine sediment, hydrocarbons, metals, organics such as pesticides and herbicides, and nutrients such as nitrogen and phosphorus.

How it works

During a stormwater event, water enters the chamber within the device via an inlet pipe or overhead grate. Gross debris and sediment settle out in the sump.

As water fills the chamber, flow is directed up through an angled screen and flow distribution media into the filter module. Particles fall away from the filter media to prevent it from clogging, and flow is evenly distributed across the media for maximum treatment.

Treated flow exits the filter module via a conveyance channel to an outlet module.

A space allowance is provided for the filter media to swell and circulate through the device. This additional room ensures a higher flow through capacity.

In addition, a drain-down system keeps the media from staying submerged between storms.

This alternative approach has been fully vetted by the Auckland Regional Council, which approved the Up-Flo® Filter for treatment of stormwater runoff.

As a result of using this advanced filtration system, Orakei Marina Development was able to exceed the Council's requirements for stormwater treatment of 75% of total suspended solids. The system removes more than 90% of particles with a mean particle distribution of 20 microns.

Based on the success of the Orakei Marina project, other areas of the country now look to Auckland for guidance on the best treatment technologies for a particular job.

Learn more

To learn more about how Up-Flo® Filter can help you to manage water more effectively, visit **hydro-int.com**, search **Up-Flo Filter** online or contact us:

Americas
+1 (207) 756 6200
inquiries@hydro-int.com

Asia Pacific
+61 436 433 686
enquiries@hydro-int.com

Europe & RoW
+44 (0)1275 878371
enquiries@hydro-int.com

Middle East
+971 506 026 400
enquiries@hydro-int.com

hydro-int.com/contact